CABLE GLAND FOR NON-ARMOURED CABLE
ENCG , ECG SERIES
EXPLOSION PROOF

BGM ®
BELGIUM
A QUALITY PRODUCT

APPLICATION

The ENCG cable glands are suitable for used in Zone 1, 2 and 21, 22 hazardous areas to enable direct in sertion of normal un-armoured cable into Ex d equipment or enclosure. The gland nut is provided with female threads ended.

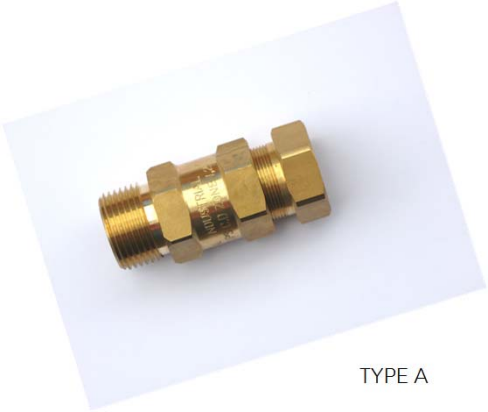

TYPE A

TECHNICAL DATA

Explosion protection : Ex II 2 G Ex d IIC T6/ T5
Compliance with : IEC 60079-0/ 1 , EN61241-0/ 1
Degree of protection : IP66 acc to EN 60529 / IEC 60529
Ambient Temp. (Ta) : -20° C to + 75° C T6
Entries thread : NPT or ISO thread
Protection class for U : Class I, Divition1 or 2 Group.C,D
: Class II, Division 1 or 2 Groups.E,F,G
(T.) Temperature class of enclosure to which will be connected.

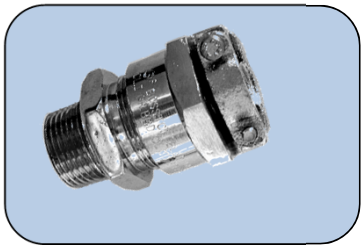

TYPE B

SPECIFICATION

Body and cover : Brass (Chromium plated is available upon request)
Sealing ring : Neoprene (CR) -25°C to +100°C
Entry thread seal : Thermoplastic elastomer

CATALOGEU NUMBER AND DIMENSIO

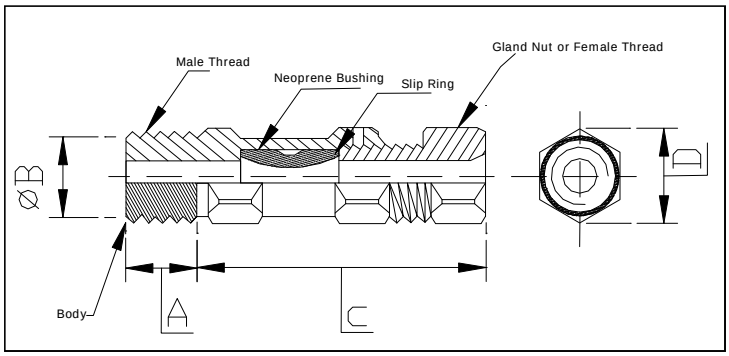

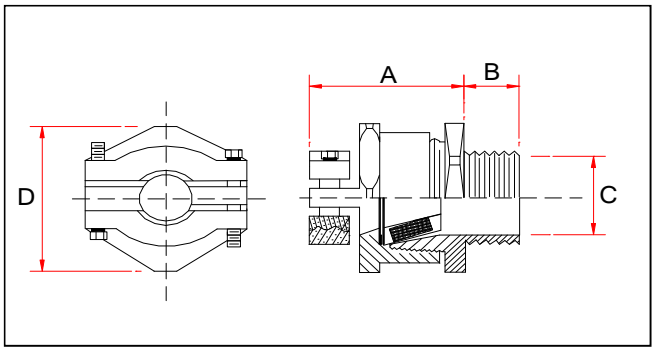

Cable Jacket Outer Dizmenter (mm.)	Entries Thread NPT	Entries Thread Metric	Type A Male Thread Type A Cat.,No.	Type A Male and Female Thread Cat.,No.	Dimensions in mm. A	B	C	D	Type B Cat.,No.	Dimensions in mm A	B	C	D
9 - 14	1/2"	M20x 1.5	ENCG 1M - #	ENCG 1MF-#	14.5	15	68	25	ECG 114	45	16	14	37
15 - 19	3/4"	M25x 1.5	ENCG 2M-#	ENCG 2MF-#	14.5	20	68	32.5	ECG 219	49	21	19	35
20 - 24	1"	M32x 1.5	ENCG 3M-#	ENCG 3MF-#	16.5	25	82	39.5	ECG 322	58	20	26	35
25 - 30	1.1/4"	M40x 1.5	ENCG 4M-#	ENCG 4MF-#	16.5	32	82	50	ECG 324	58	19	26	61
31 - 40	1.1/2"	M50x 1.5	ENCG 5M-#	ENCG 5MF-#	16.5	42	82	58	ECG 430	66	19	34	69
41 - 48	2"	M63x 1.5	ENCG 6M-#	ENCG 6MF-#	16.5	50	82	73	ECG 540	76	19	49	80
49 - 58	2.1/2"	_	ENCG 7M-#	_	29	72	87	98					
59 - 70	3"	_	ENCG 8M-#	_	30	75	92	105					
71 - 80	3.1/2"	_	ENCG 9M-#	_	30	81	92	105					

Note:
for M Thread
for NPT Thread