Portable Hand Lamps EHL SERIES

EXPLOSION PROOF

BELGIUM

A QUALITY PRODUCT

TECHNICAL DATA

Type of Protection: Ex d IIB T6

Conforming to : Standards IEC 60079-1 or UL 60079-1

Marking for test : Ex II2G

Degree of Protection : IP66/67 acc.To IEC 60529

Ambient Temp. (Ta) : -20° C to+ 55° C

Rated Voltage : 12V.DC , 24V.DC. And 220V.AC. 50Hz.

Protection class for UL. : Class I, Divition1 or 2 Group.C,D

Class II, Divition1 or 2 Groups.E,F,G

Protection class for IEC : Zone1 and Zone 2

SPECIFICATION

Body material : Rubber coated copper free aluminium

Guard and hook : Stainless steel

Glass Globe : Heat and impact resistant glass

CATALOGUE NUMBER

Lamp Watts	Cat.,No.		Volt
	Incandescent	Compact Fluorescent	
11	_	EHLC11	220
15	_	EHLC15	220
20	_	EHLC20	220
60	EHLI60-220	_	220
60	EHLI60-012	_	12VDC
60	EHLI60-024	_	24VDC
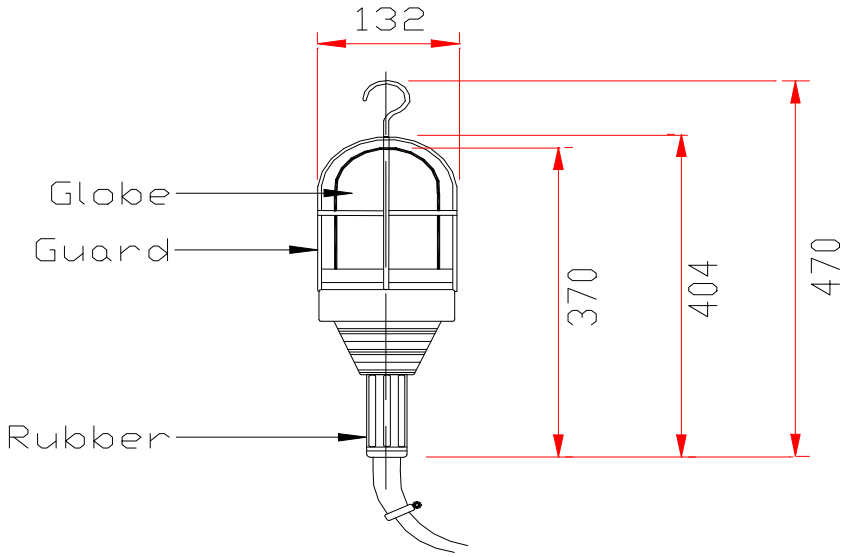
DIMENSION IN MM.